AD-Tech

OPTICAL FIBER DISTRIBUTION CABINET

(ODC)



ABADIS DYNAMIC TECHNOLOGY

09121206211 - 09368188793

AD-Tech

About the Product

Fiber optic distribution cabinets are a key component of telecommunication and fiber-optic network infrastructure, playing a vital role in the management, distribution, and protection of fiber-optic connections. Designed specifically for outdoor installation, their robust, waterproof, and dustproof construction ensures reliable performance under harsh environmental conditions.

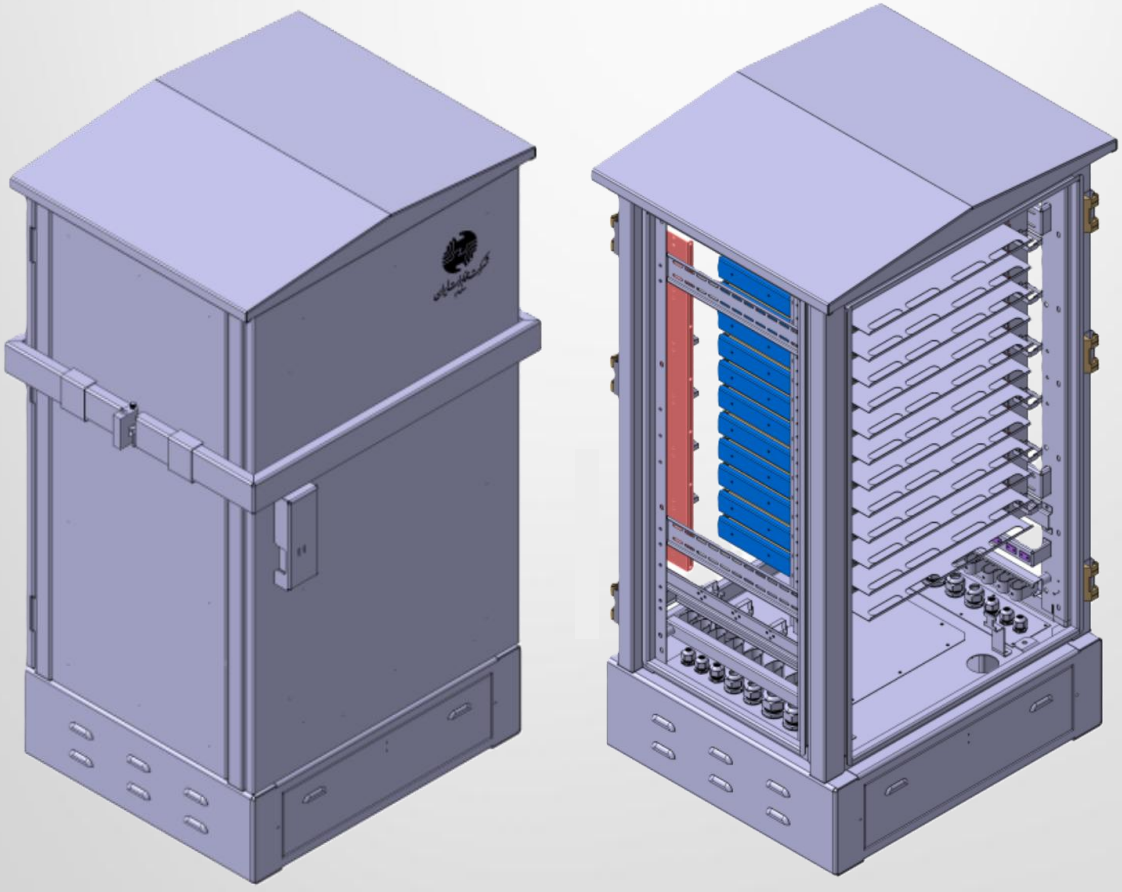

ABADIS DYNAMIC TECHNOLOGY

09121206211 - 09368188793

AD-Tech

Features

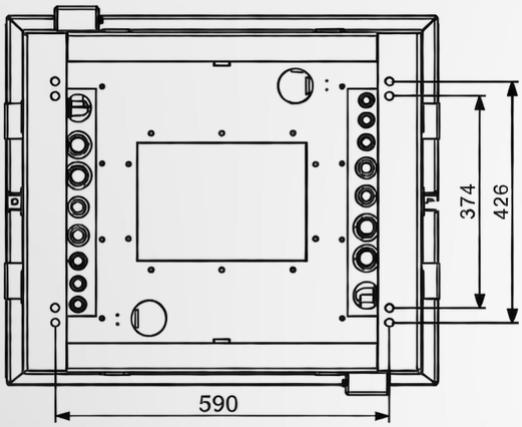

Dimensions (H × D × W): 1360 × 681 × 765

IP55 certified by EPIL laboratory

Body: ST12 steel sheet and galvanized sheet

Coating: Electrostatic powder coating

Color: RAL 7035

Access: Door equipped with an anti-theft mechanical system

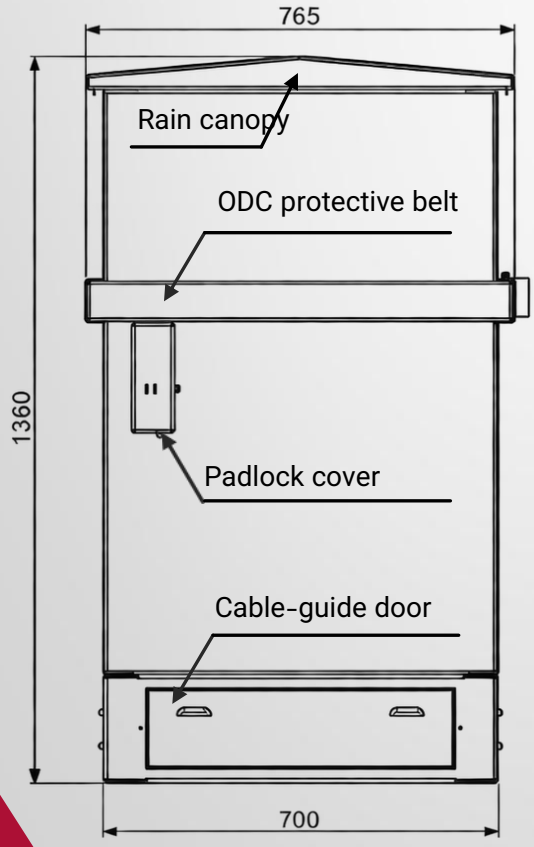

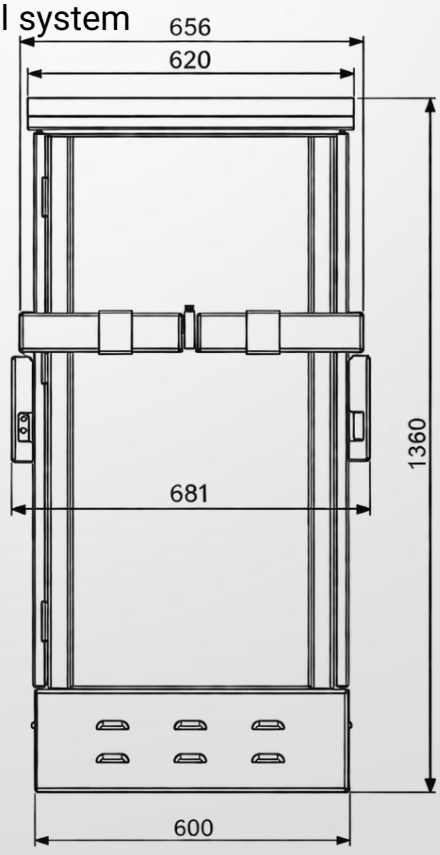

ABADIS DYNAMIC TECHNOLOGY

09121206211 - 09368188793

AD-Tech

The modular design of this equipment supports dozens to hundreds of fiber-optic ports and accommodates various splitters and fusion splice trays. Internal cable pathways are precisely defined, and observing the standard bend radius prevents signal loss while extending the service life and efficiency of the network.

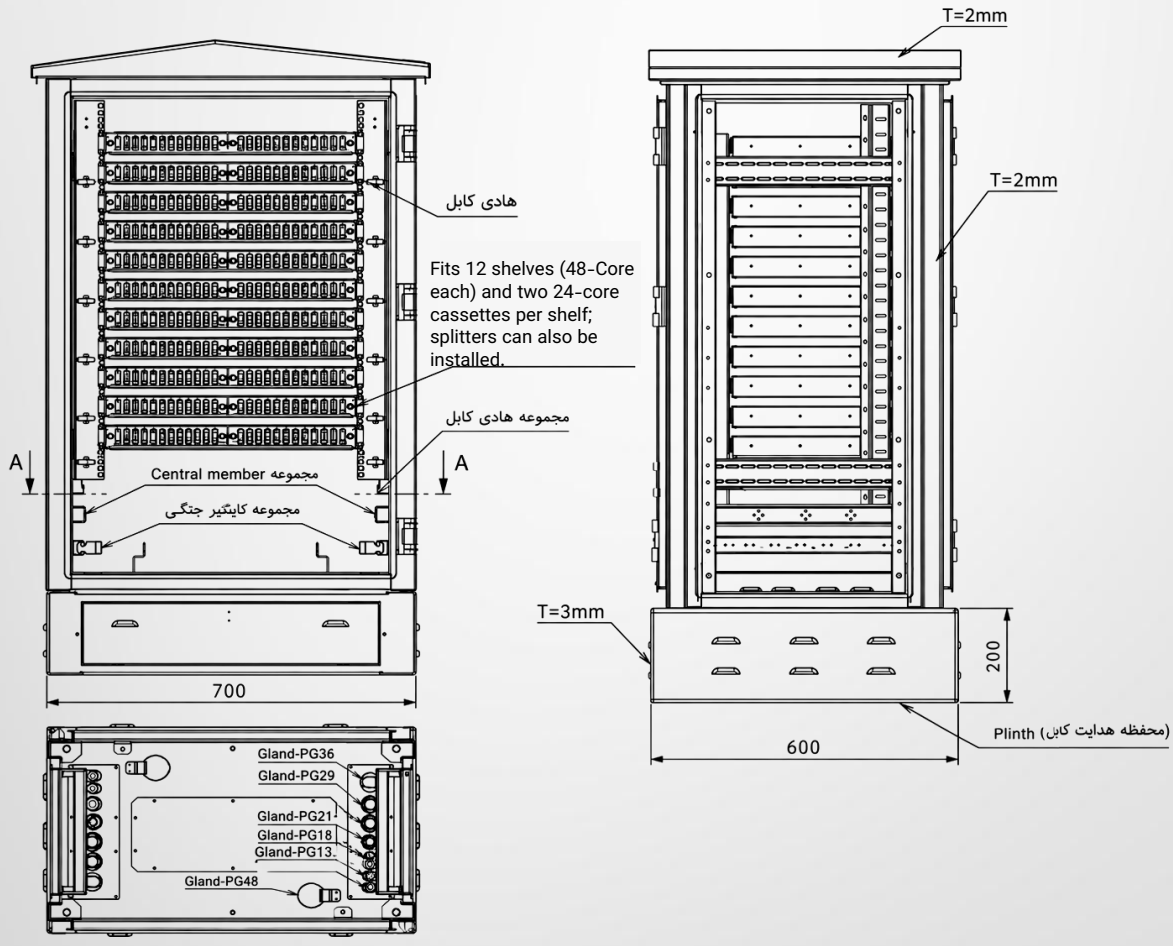

ABADIS DYNAMIC TECHNOLOGY

09121206211 - 09368188793

AD-Tech

Protection & Security System

This cabinet is designed to provide physical protection and prevent unauthorized access. Its security system comprises a security belt, a padlock cover, double-walled front and rear doors with a three-point locking mechanism, and double-walled side panels, increasing the structure's resistance to intrusion and damage. A sloped, rain-guiding roof further protects the cabinet and its internal equipment in outdoor environments.

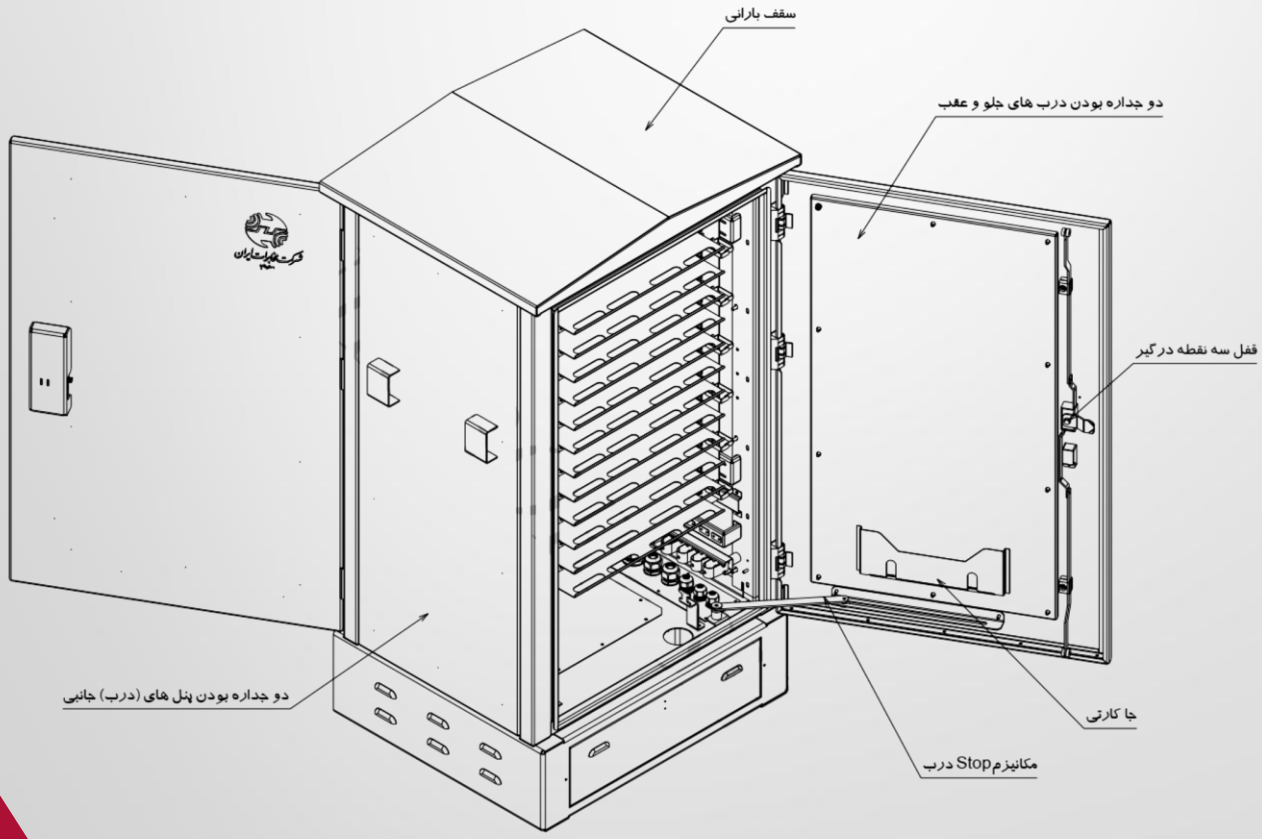

ABADIS DYNAMIC TECHNOLOGY

09121206211 - 09368188793

AD-Tech

48-Core Shelf

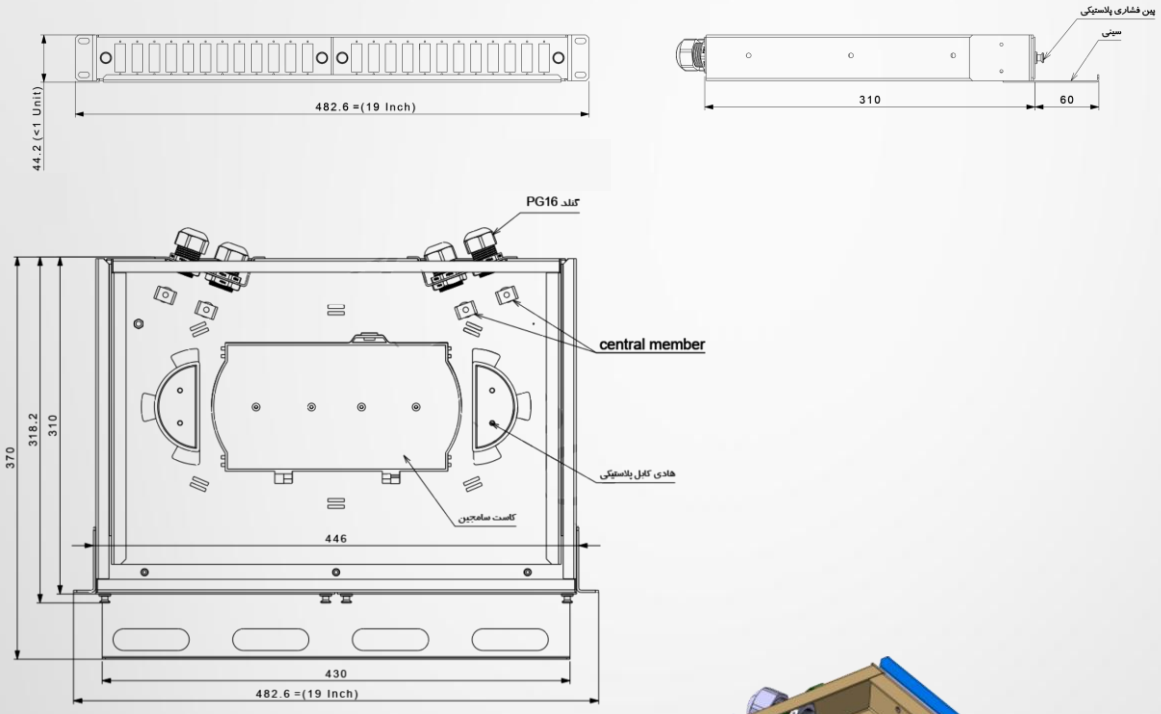

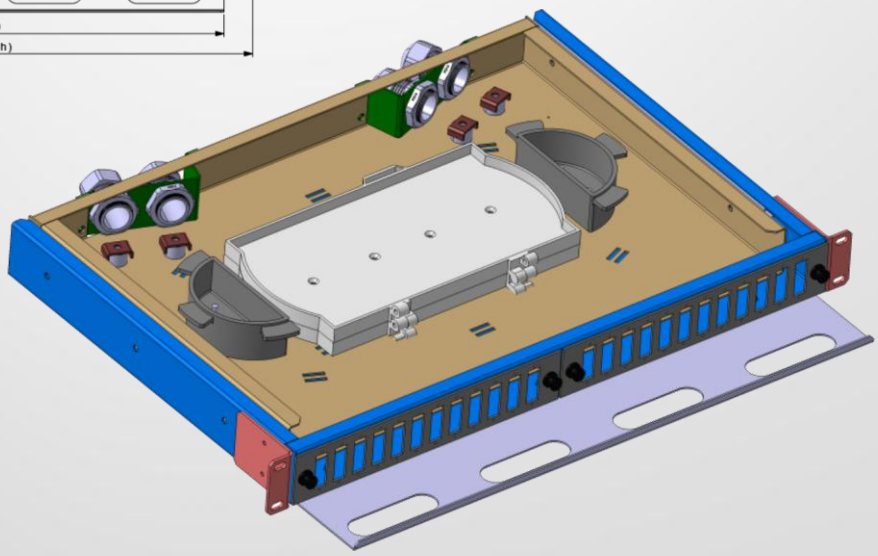

ABADIS DYNAMIC TECHNOLOGY

09121206211 - 09368188793

AD-Tech

Concrete Plinth

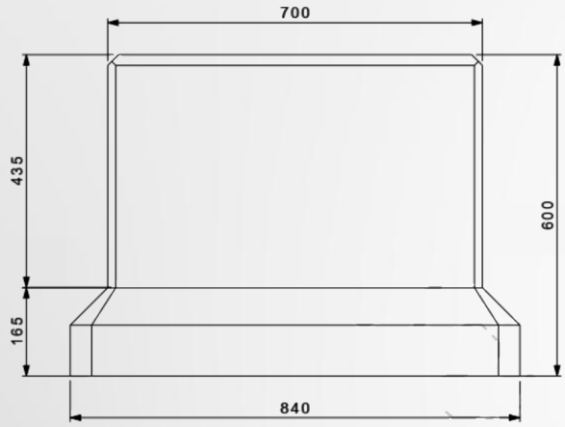

The concrete plinth is not part of the ODC accessories.

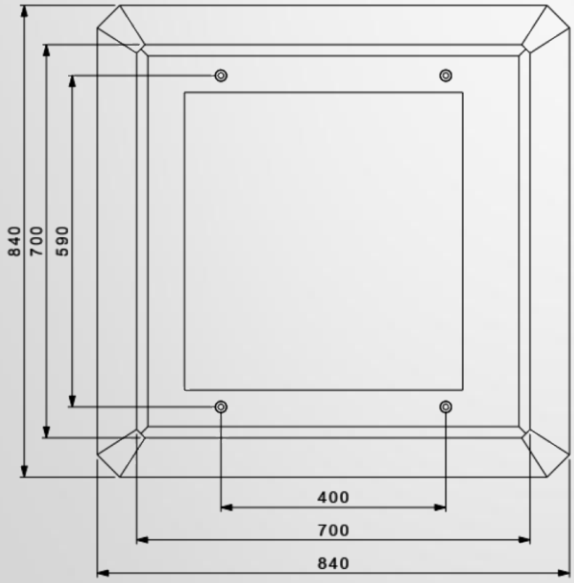

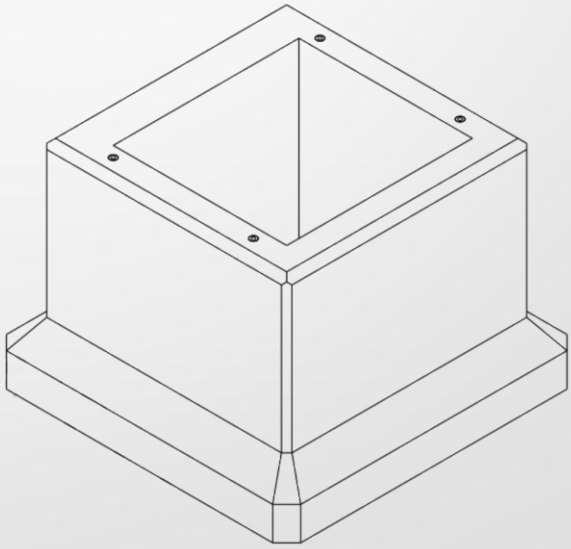

ABADIS DYNAMIC TECHNOLOGY

09121206211 - 09368188793