AD-Tech

OPTICAL FIBER DISTRIBUTION CABINET (ODC)



ABADIS DYNAMIC TECHNOLOGY

09121206211 - 09368188793

AD-Tech

About the Product

Fiber optic distribution cabinets are a key component of telecommunication and fiber-optic network infrastructure, playing a vital role in the management, distribution, and protection of fiber-optic connections. Designed specifically for outdoor installation, their robust, waterproof, and dustproof construction ensures reliable performance under harsh environmental conditions.



ABADIS DYNAMIC TECHNOLOGY

09121206211 - 09368188793

AD-Tech

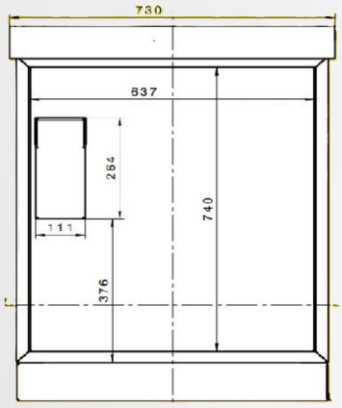

Features

Dimensions (H × D × W): 978 × 800 × 730

IP55 certified by EPIL laboratory

Rack capacity: 11 units

Body: ST12 steel sheet and galvanized sheet

Coating: Electrostatic powder coating

Color: RAL 7035

Access: Door equipped with an anti-theft mechanical system

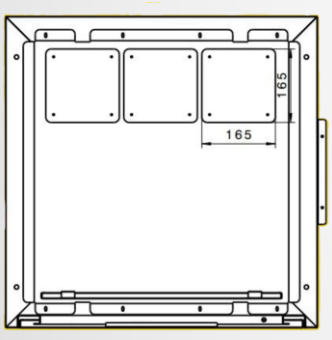

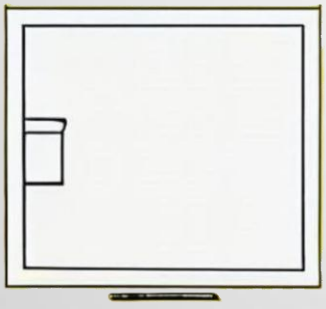

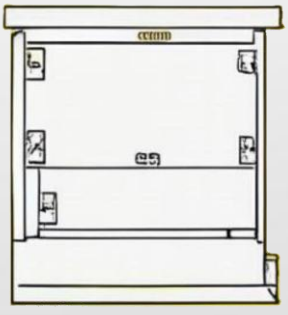

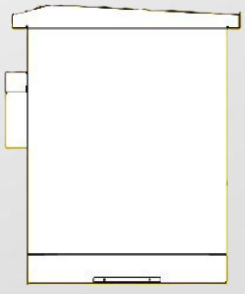

ABADIS DYNAMIC TECHNOLOGY

09121206211 - 09368188793

AD-Tech

The modular design of this equipment supports dozens to hundreds of fiber-optic ports and accommodates various splitters and fusion splice trays. Internal cable pathways are precisely defined, and observing the standard bend radius prevents signal loss while extending the service life and efficiency of the network.

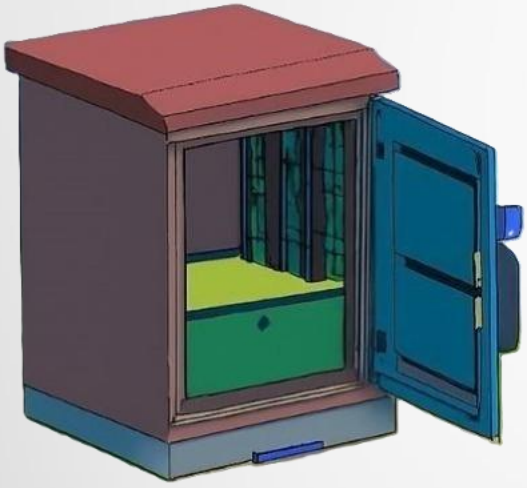



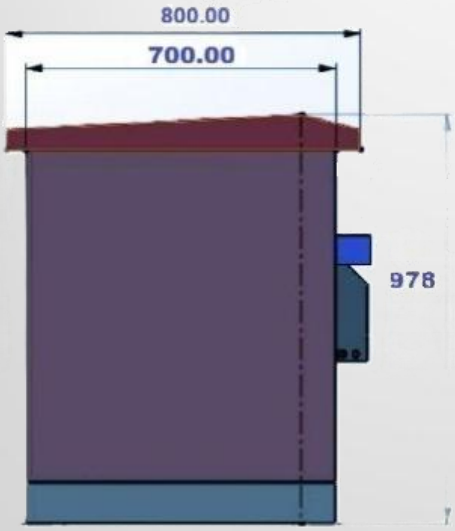

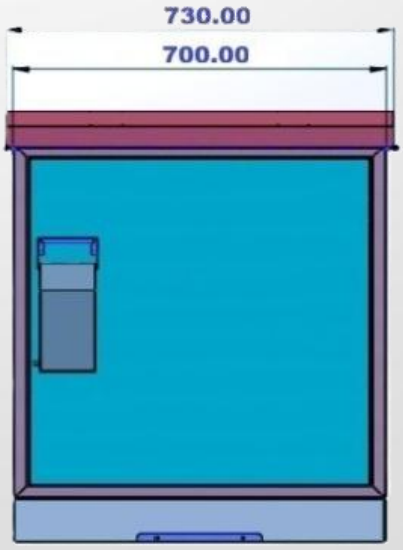

ABADIS DYNAMIC TECHNOLOGY

09121206211 - 09368188793

AD-Tech



Anti-Theft Security & Protection

Lockable doors and a strong security structure give this product a high level of physical protection.





ABADIS DYNAMIC TECHNOLOGY

09121206211 - 09368188793

AD-Tech



With easy maintenance and a user-centered design, these cabinets are a reliable choice for expanding and supporting modern fiber-optic networks.



ABADIS DYNAMIC TECHNOLOGY

09121206211 - 09368188793

AD-Tech

Metal Enclosure (CAGE)



ABADIS DYNAMIC TECHNOLOGY

09121206211 - 09368188793

AD-Tech

About the Product

This protective metal enclosure is installed around telecommunication and fiber-optic cabinets, adding an extra layer of security that prevents unauthorized access, theft, and physical damage to the cabinets. Its robust fenced structure maintains convenient access for service and maintenance while enhancing the security of equipment installed outdoors.



ABADIS DYNAMIC TECHNOLOGY

09121206211 - 09368188793

AD-Tech

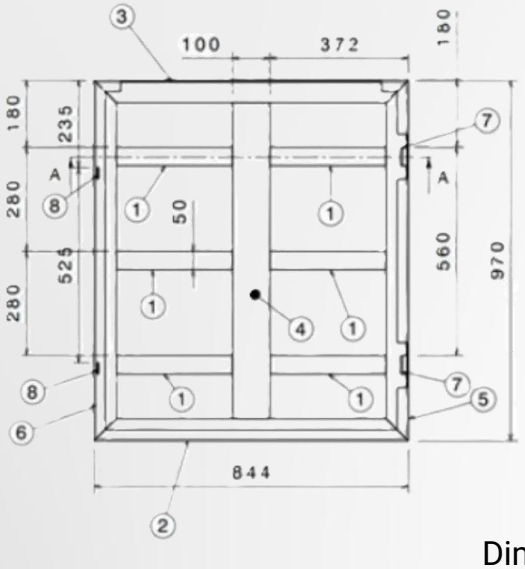



Dimensions (H × D × W): 1013 × 900 × 950

Body: ST12 steel sheet

Coating: Hot-dip galvanizing
Color: RAL 7035

Access: Door equipped with an anti-theft mechanical system

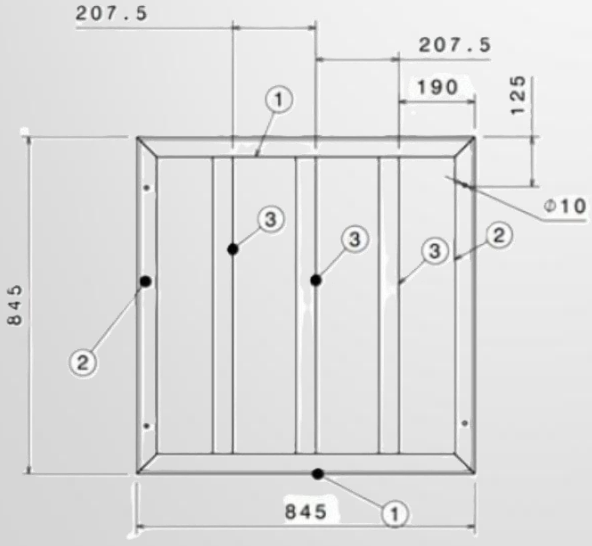



ABADIS DYNAMIC TECHNOLOGY

09121206211 - 09368188793

AD-Tech

CAGE Installation Guide

1) First, place the side walls of the CAGE onto the concrete bolts.
Then slide the rear wall into the side walls and tighten the top bolts.

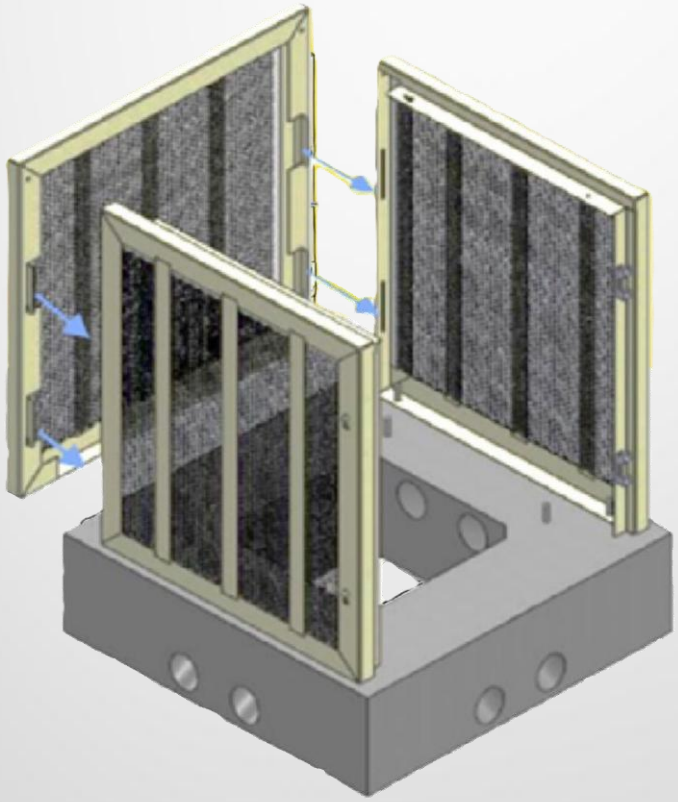

ABADIS DYNAMIC TECHNOLOGY

09121206211 - 09368188793

AD-Tech

CAGE Installation Guide

2) The CAGE roof is likewise slid onto the top of the side walls. The front bolts are then fully tightened to secure the connection. Next, the door is mounted on the assembly using hinges. The door locks are positioned inside the CAGE and feature an anti-theft system. All CAGE walls are covered with expanded metal mesh with a mesh size of 14 × 21 mm.

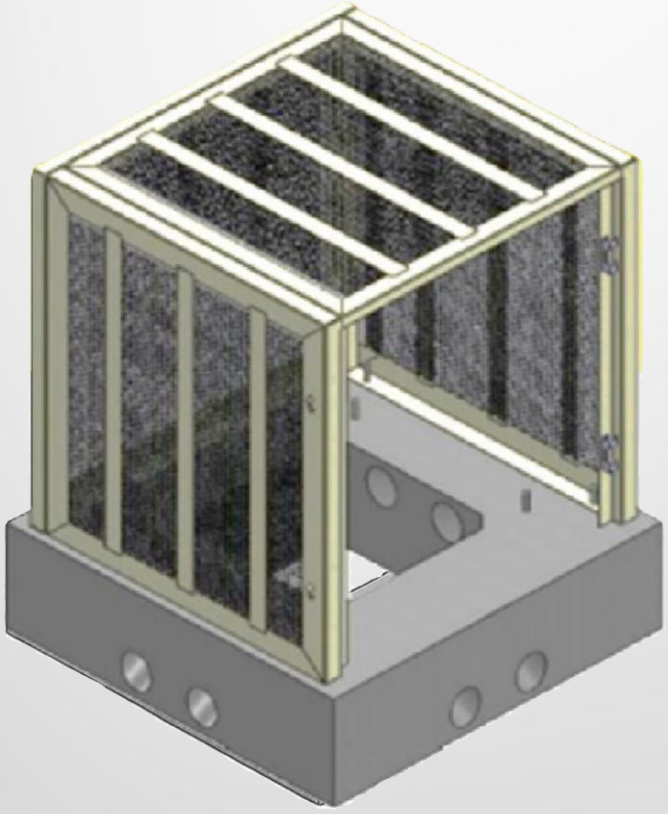

ABADIS DYNAMIC TECHNOLOGY

09121206211 - 09368188793

AD-Tech

Anti-Theft Security & Protection

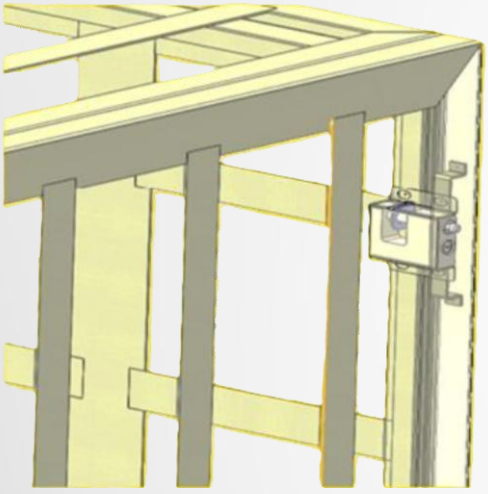

Hidden fence lock mechanism: Two locks are installed inside the fence structure and remain hidden from view; only the keys are accessible from outside. Turning the key releases the internal rod, opening the lock so the fence door can be opened.



ABADIS DYNAMIC TECHNOLOGY

09121206211 - 09368188793

AD-Tech

Concrete Foundation

(CONCRETE FOUNDATION)

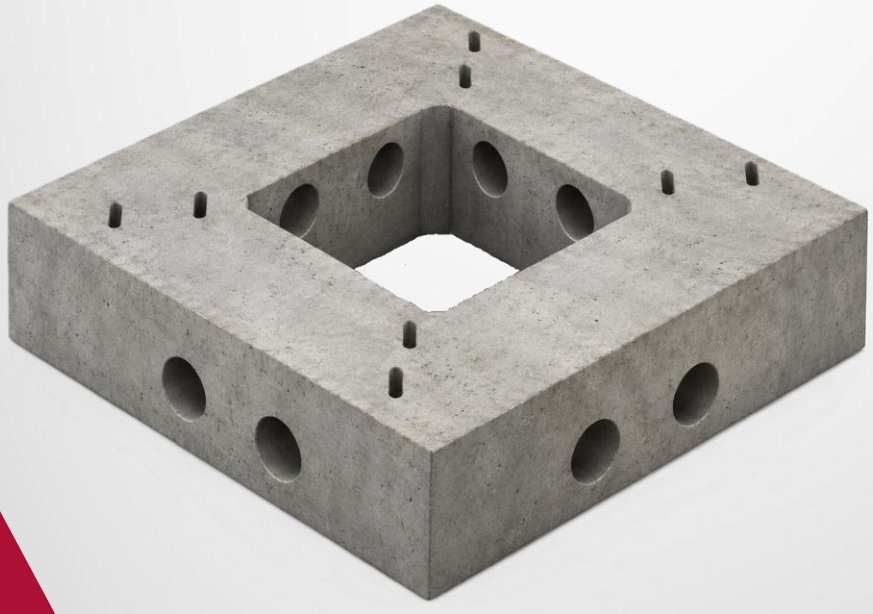

ABADIS DYNAMIC TECHNOLOGY

09121206211 - 09368188793

AD-Tech

About the Product

The concrete foundation is designed as a robust base for installing the CAGE. By providing routes for pipes, microducts, and cables together with suitable anchor points, it stabilizes the structure and increases the strength and safety of the assembly at the installation site.

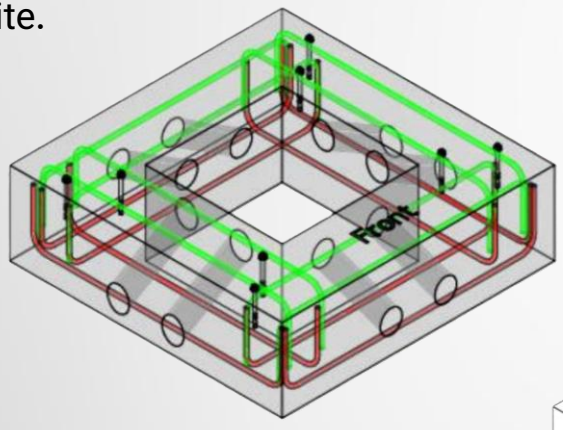

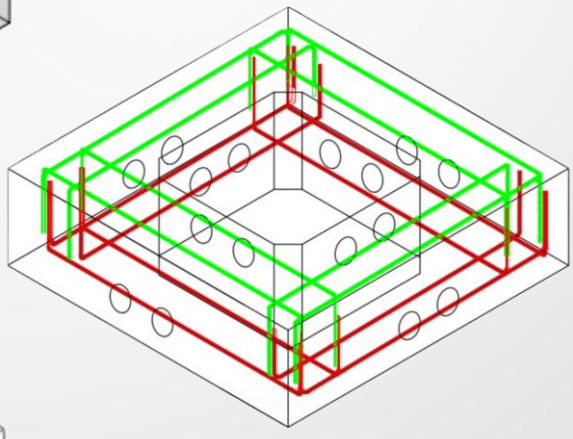

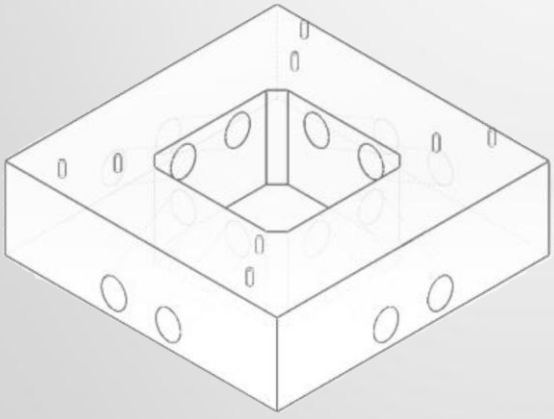

ABADIS DYNAMIC TECHNOLOGY

09121206211 - 09368188793

AD-Tech

All intersection points of the 14 mm rebars, as well as the points where the CAGE bolts intersect the rebars, must be welded.

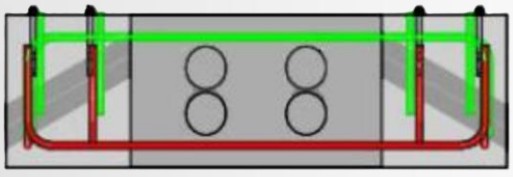

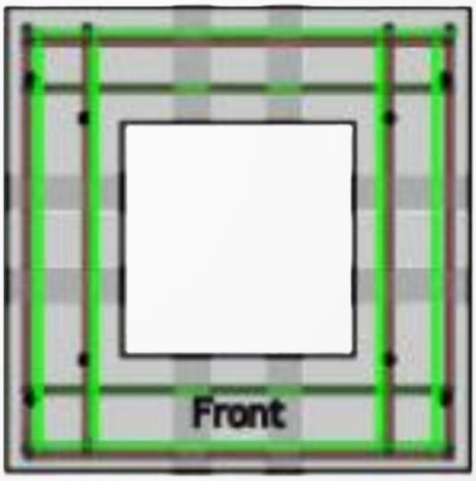

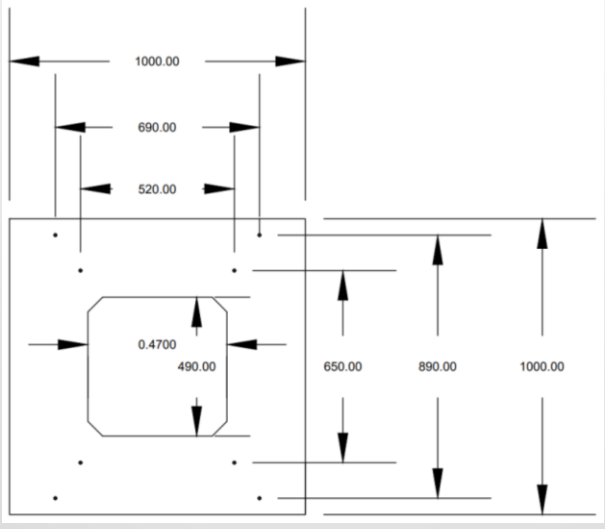

ABADIS DYNAMIC TECHNOLOGY

09121206211 - 09368188793