AD-Tech

ABADIS DYNAMIC TECHNOLOGY

Optical Distribution Cabinets (ODC)

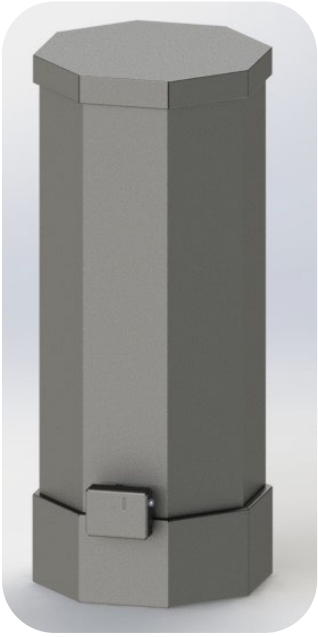

Welcome to the catalog of our next-generation Optical Distribution Cabinets (ODCs).

These ODCs are engineered with advanced technologies and precision design to deliver reliable, efficient, and scalable solutions for all your fiber optic distribution needs

This project comprises two fundamental components: the cabinet itself and the base, which is designed to provide stability and support for the cabinet.

In this document, we will delve into the details of each component of the ODC project. The design and functionality of the cabinets, as well as the specifications of the bases, will be examined.

This comprehensive review aims to provide insight into how these elements work together to deliver an efficient and reliable solution for operational requirements

Product Features:

- Advanced Design: Compact form factor suitable for installation in space-constrained environments.
- Durability: Constructed from high-quality materials resistant to harsh environmental conditions.
- Scalability: Easily expandable to accommodate future network growth.
- Security: Advanced locking systems to prevent unauthorized access.
- Ease of Installation: Simplified installation process with comprehensive guidelines

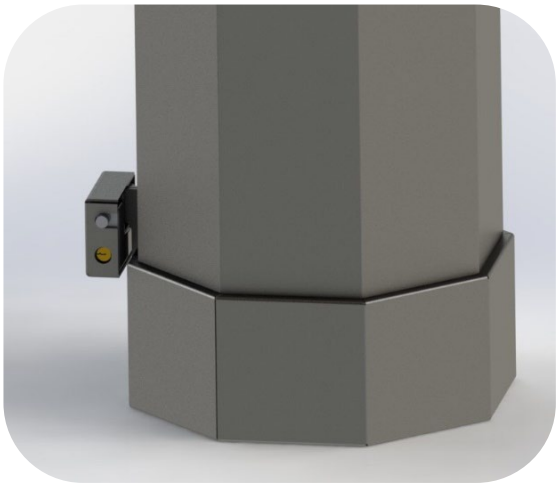

Microduct Capacity:

Supports up to 6 microducts with 8.5 mm diameter, accommodating up to 7 channels.

Fiber Capacity:

- **Front Section:** 6 splice trays, each with a capacity of 24 fibers for pigtail fusion and through splicing, totaling up to 144 fibers.
  (Mounting space for 72 SC duplex adapters to connect 72 pigtails, and 72 SC adapters for splitter connections)
- **Rear Section:** 6 splice trays, each with a capacity of 24 fibers for through splicing, totaling up to 144 fibers.

Dimensions:

380 mm × 380 mm × 930 mm

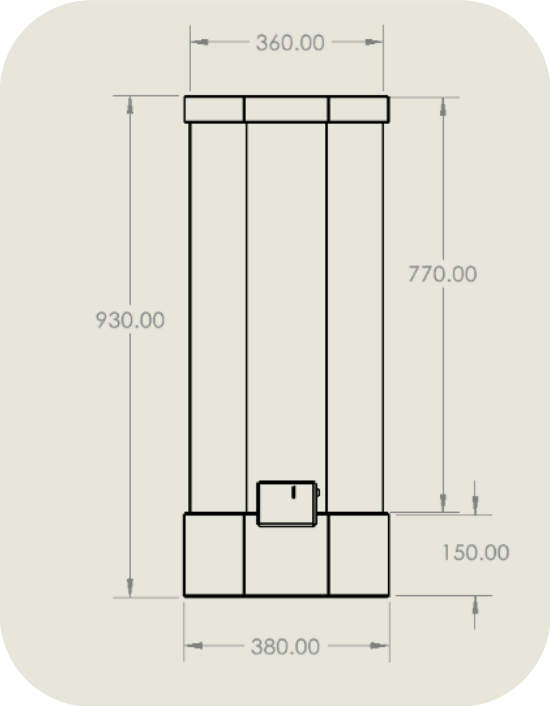

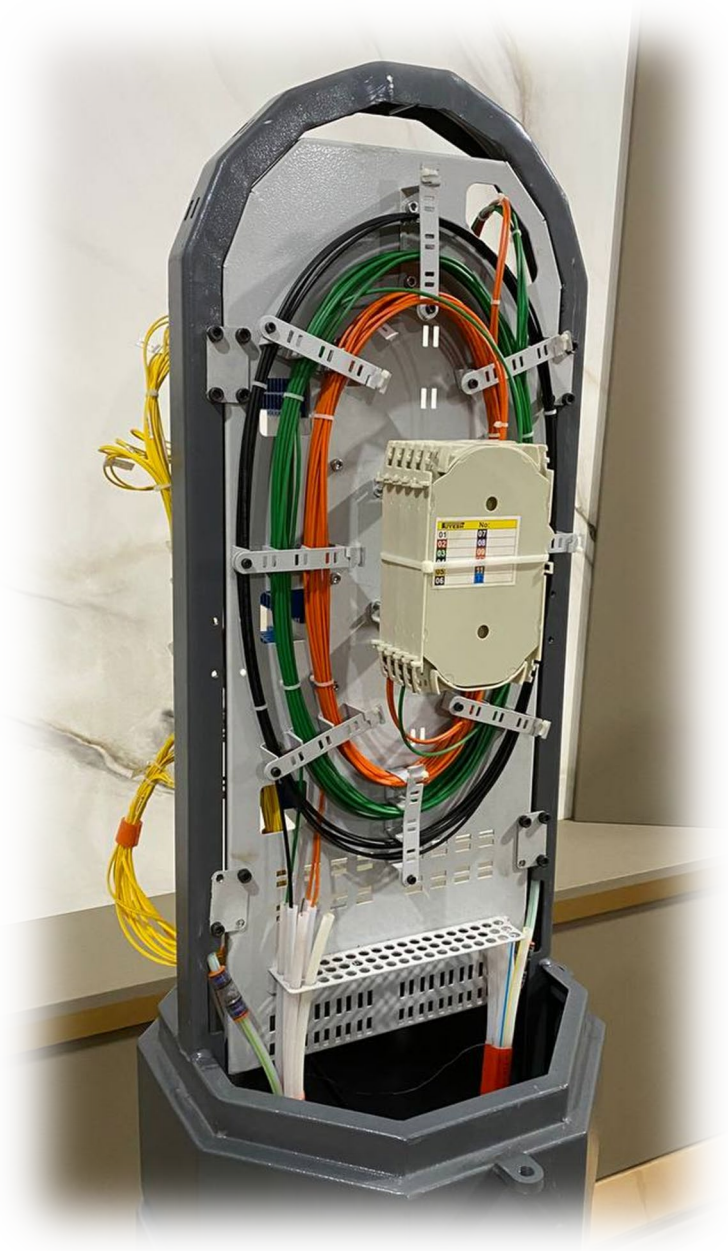


CABLE 3
CABLE 2
CABLE 5
CABLE 6


No:
01 07
02 08
03 09
04 10
05 11
06 12

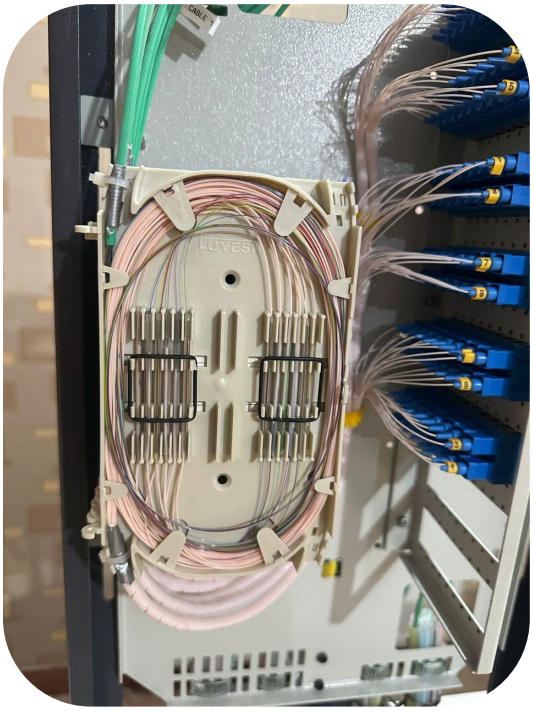


TO
Reserve
TO
Reserve
TO
Reserve
TO
Reserve

Components:

1. **Main Door:**
   1.5 mm thick steel sheet
2. **Main Column:**
   3 mm thick steel sheet
3. **Bottom Plate:**
   3 mm thick steel sheet
4. **Sealing Gasket**
5. **Rubber Cover Plate:**
   2 mm thick steel sheet
6. **Main Base:**
   2 mm thick steel sheet
7. **Main Tray:**
   1.5 mm thick steel sheet
8. **Tray Holder:**
   3 mm thick steel sheet
9. **Cable Loosetube Divider:**
   2 mm thick steel sheet
10. **Duct Holder:**
    1.5 mm thick steel sheet
11. **Splice Tray Base:**
    2 mm thick steel sheet
12. **Splice Tray (Cassette)**
13. **Adapter Tray:**
    1.5 mm thick steel sheet
14. **Sliding Mechanism for Door and Column:**
    1.5 mm thick steel sheet
15. **Lock Guard:**
    3 mm thick steel sheet
16. **Hinge Bracket with Special Tool Screw**

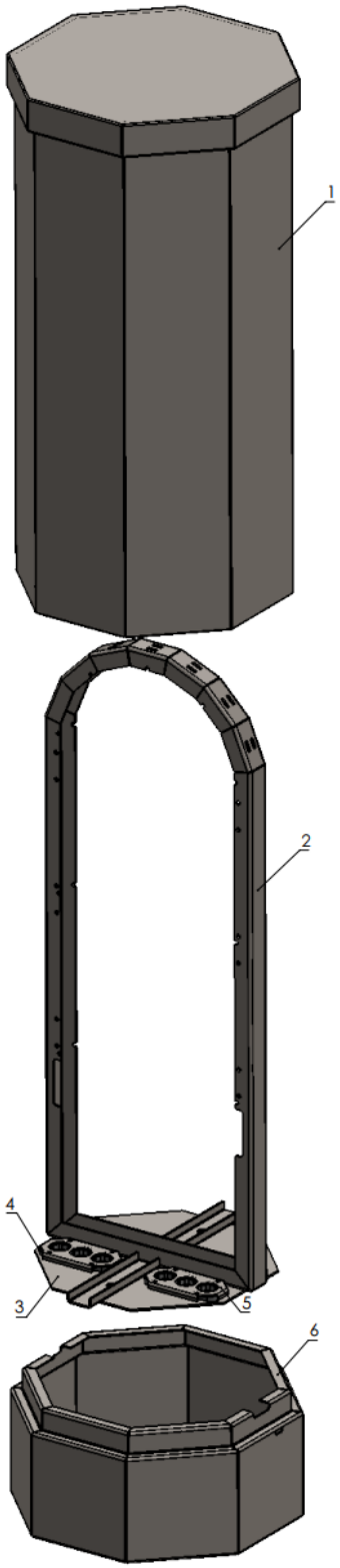

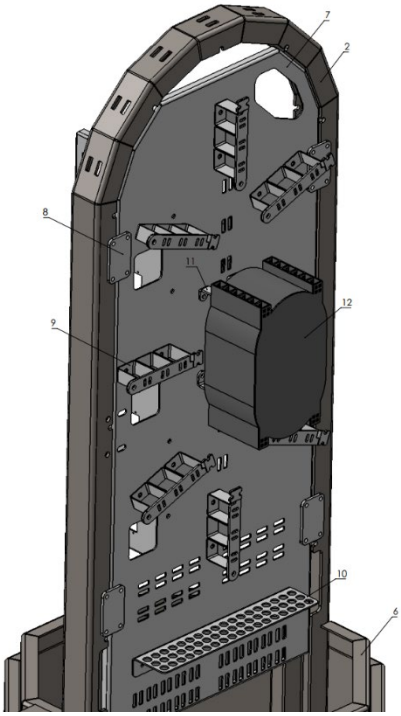

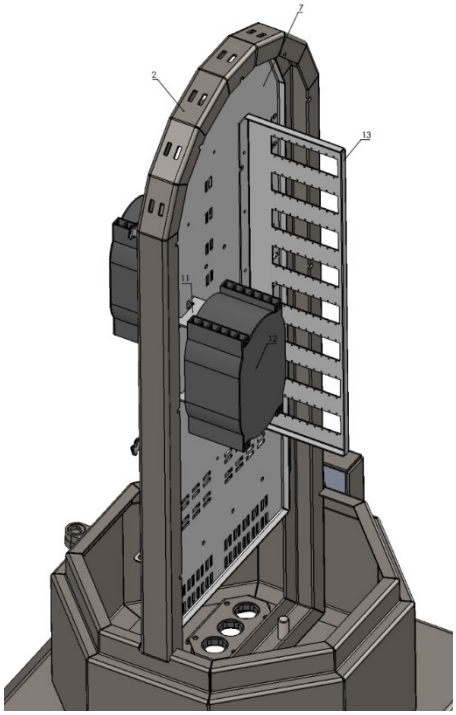

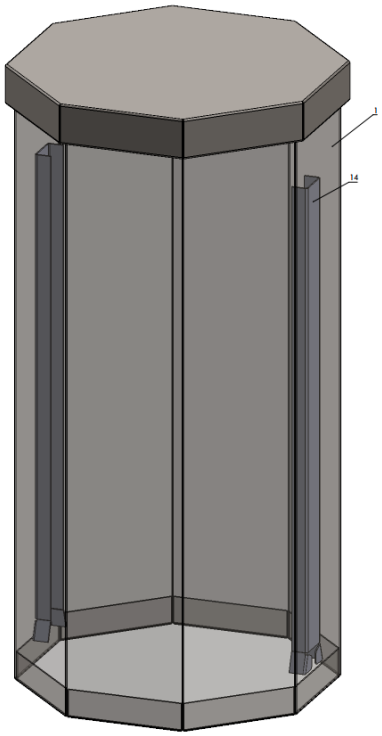

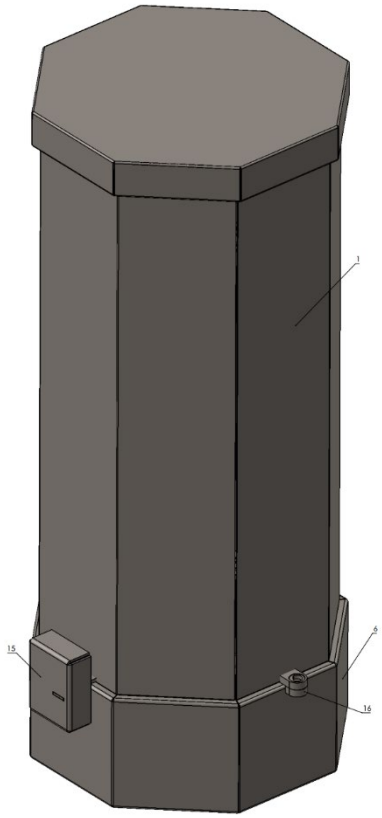

Innovative Rod-Based Foundation System

Our next-generation Optical Distribution Cabinets (ODCs) feature a newly designed base structure that eliminates the need for bulky and heavy concrete foundations.

Instead of concrete, this system utilizes a galvanized steel rod-frame structure that is easily embedded into the ground. Stability is achieved through soil friction and the weight of the overlying earth.

This innovative design offers the following key advantages:

Lightweight and Easy to Install:

The rod-based foundation is significantly lighter, reducing transportation costs and labor requirements during installation. It eliminates the need for heavy-duty equipment or time-consuming concrete curing processes.

Flexible and Adaptable:

Unlike rigid concrete bases, this design adapts to various ground conditions and offers greater versatility in diverse environments, from urban areas to remote locations.

Durable and Secure:

Despite its lightweight nature, the galvanized rod system provides a stable and corrosion-resistant base, ensuring long-term performance even under harsh environmental conditions

Base Components:

1. **Main Base Plate:**
   6 mm thick steel sheet, dimensions 600 × 600 mm
2. **Main Structure Rods:**
   14 mm thick galvanized steel rebar, embedded 700 mm into the ground, total length 6 meters
3. **Rolling Thread:**
   M16 threaded connection for fastening the base to the structure
4. **Welded Bolts:**
   M12 welded bolts
5. **Soil Retention Plate:**
   1.5 mm thick galvanized steel sheet, dimensions 700 × 700 mm

Technical Specifications

- **Material:** High-quality steel with corrosion-resistant coating
- **Operating Temperature Range:** –40°C to +85°C

- **Ingress Protection Rating:** IP55

Applications

- **Telecommunication Networks**
- **Fiber to the Home (FTTH) Deployments**
- **Data Centers**
- **Infrastructure Projects**

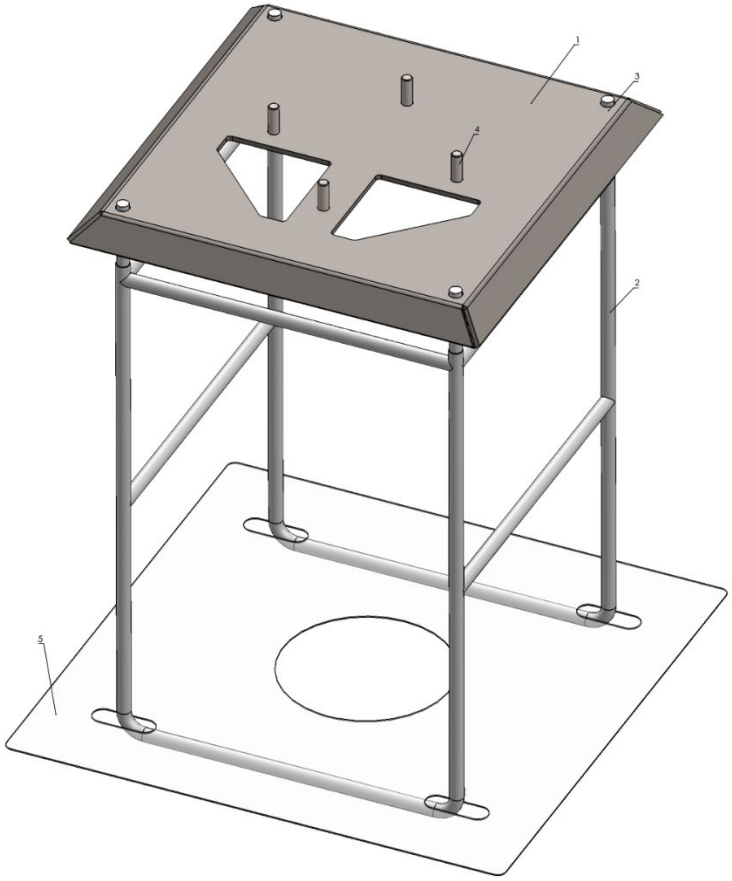

We appreciate your time and consideration